ТОЧЕНИЕ серия PU

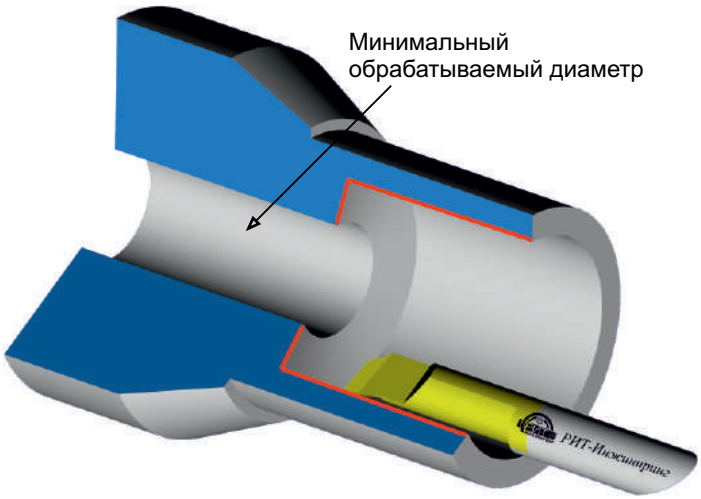

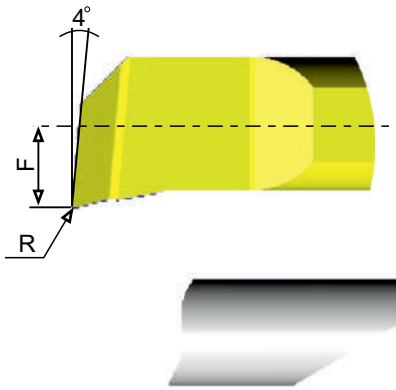

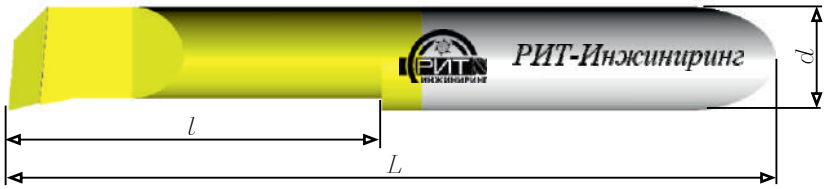

Минимально обрабатываемый диаметр	Обозначение	Параметры инструмента				
		Dh6	L	l	R	F
1.0	CR-PU-1.0-4-3-35-S	3.0	35	4	0.05	0.5
1.5	CR-PU-1.5-6-3-35-R0.1-S	3.0	35	6	0.1	0.7
2.1	CR-PU-2.1-4-3-35-S	3.0	35	4	0.05	0.8
2.1	CR-PU-2.1-6-3-35-R0.1-S	3.0	35	6	0.1	0.8
2.1	CR-PU-2.1-10-3-35-R0.15-S	3.0	35	10	0.15	0.8
3.1	CR-PU-3.1-10-3-35-S	3.0	35	10	0.05	1.3
3.1	CR-PU-3.1-15-3-35-S	3.0	35	15	0.05	1.3
3.1	CR-PU-3.1-15-3-35-R0.1-S	3.0	35	15	0.1	1.3
3.1	CR-PU-3.1-10-3-35-R0.2-S	3.0	35	10	0.2	1.3
3.1	CR-PU-3.1-15-3-35-R0.2-S	3.0	35	15	0.2	1.3
4.1	CR-PU-4.1-15-4-47-S	4.0	47	15	0.05	1.7
4.1	CR-PU-4.1-10-4-47-S	4.0	47	10	0.1	1.7
4.1	CR-PU-4.1-15-4-47-R0.1-S	4.0	47	15	0.1	1.7
4.1	CR-PU-4.1-20-4-47-S	4.0	47	20	0.1	1.7
4.1	CR-PU-4.1-10-4-47-R0.2-S	4.0	47	10	0.2	1.7
4.1	CR-PU-4.1-15-4-47-R0.2-S	4.0	47	15	0.2	1.7
4.1	CR-PU-4.1-20-4-47-R0.2-S	4.0	47	20	0.2	1.7
5.1	CR-PU-5.1-15-5-47-S	5.0	47	15	0.05	2.1
5.1	CR-PU-5.1-15-5-47-R0.1-S	5.0	47	15	0.1	2.1
5.1	CR-PU-5.1-20-5-47-S	5.0	47	20	0.1	2.1
5.1	CR-PU-5.1-30-5-64-S	5.0	64	30	0.1	2.1
5.1	CR-PU-5.1-15-5-47-R0.2-S	5.0	47	15	0.2	2.1
5.1	CR-PU-5.1-20-5-47-R0.2-S	5.0	47	20	0.2	2.1
5.1	CR-PU-5.1-30-5-64-R0.2-S	5.0	64	30	0.2	2.1
6.1	CR-PU-6.1-15-6-47-S	6.0	47	15	0.05	2.8
6.1	CR-PU-6.1-15-6-47-R0.1-S	6.0	47	15	0.1	2.8
6.1	CR-PU-6.1-15-6-47-R0.2-S	6.0	47	15	0.2	2.8
6.1	CR-PU-6.1-15-6-47-S	6.0	47	20	0.2	2.8
6.1	CR-PU-6.1-30-6-64-S	6.0	64	30	0.2	2.8
6.1	CR-PU-6.1-35-6-81-S	6.0	81	35	0.2	2.8
7.1	CR-PU-7.1-20.0-7-47-S	7.0	47	20	0.20	3.3
7.1	CR-PU-7.1-30.0-7-64-S	7.0	64	30	0.20	3.3
8.1	CR-PU-8.1-15.0-8-64-S	8.0	64	15	0.20	3.8
8.1	CR-PU-8.1-20.0-8-64-S	8.0	64	20	0.20	3.8
8.1	CR-PU-8.1-35.0-8-81-S	8.0	81	35	0.20	3.8
10.1	CR-PU-10.1-35.0-10-81-S	10.0	81	35	0.2	4.8

www.rit-i.ru
info@rit-i.ru
+7(4967) 72-59-52